Product overview

Aoraki 550-15, Nero

Code 20.9344.BL

Product Overview

Overall sink size:	550mm x 430mm
Bowl dimension:	310mm x 370mm, 152mm x 370mm
Bowl depth:	/130mm
Bowl radius:	15mm
Reversible:	No
Cut out size:	530mm x 410mm
Min cabinet size:	600mm
Installation:	Overmount, Undermount
Material:	Quartz
Material Grade:	80-85% Quartz and 15-20% Acrylic and Pigments

Installation measurements

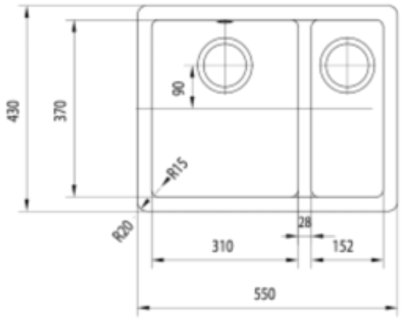

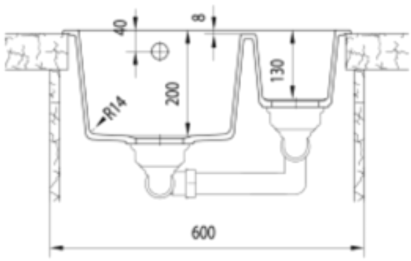

Tap Match

Orbit

Production information

Code:	9391 BL
Tap Pressure:	Mains Pressure
WELS rating:	1 Star
Warranty:	5 years
Tap swivel spout:	360°
Cartridge:	Ceramic-Disc Cartridge
Assembled:	Italy
Material:	Brass

WELS rating

Copyright © 2024 Archant

Included accessories

Schock Dual Basketwaste & Single rear Overflow - Chrome, Smiley type

Schock basket waste strainer

Overflow smiley for EcoGranit Sink (Schock branded)

Suggested accessories

Chopping Board, Wood, Granit C.

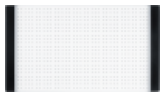

Chopping Board, Glass, EcoGranit C.

Chopping Board, Black Glass, Aoraki 550

EcoGranit Easy Care Cleaning Kit - Large

EcoGranit Cleaning Sponge

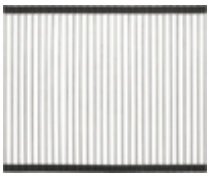

Hot Mat, Stainless Steel

Copyright © 2024 Archant